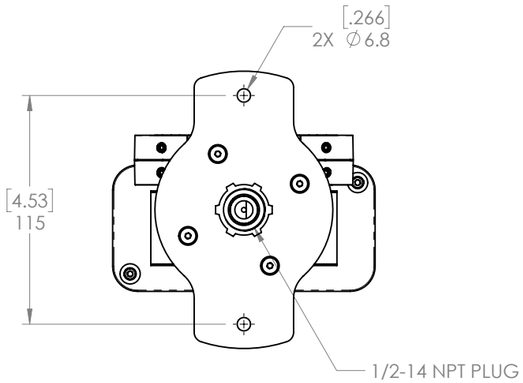

VIEW A-A
(BOTTOM VIEW)

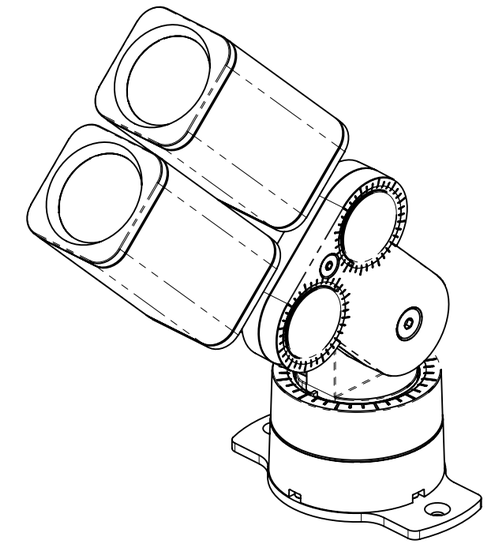

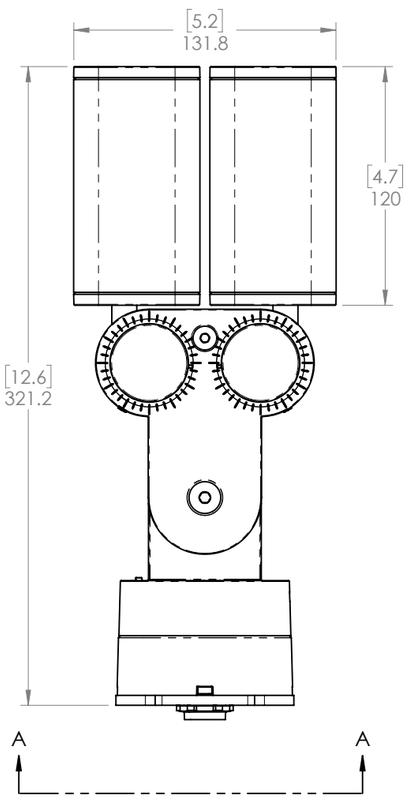

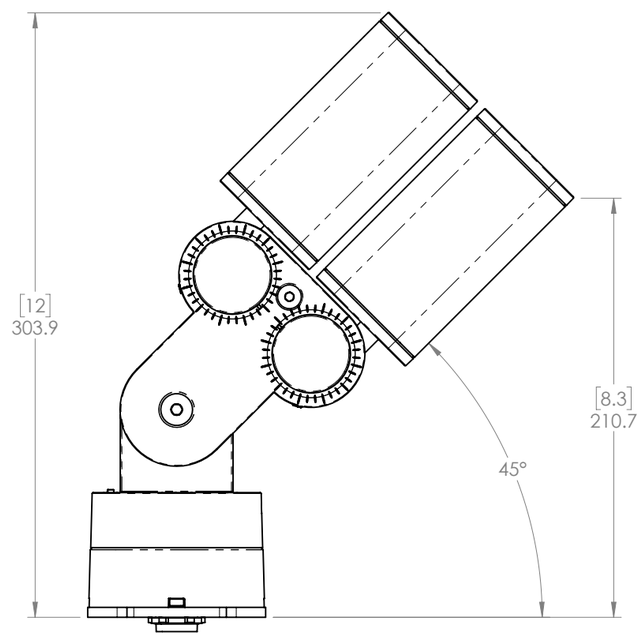

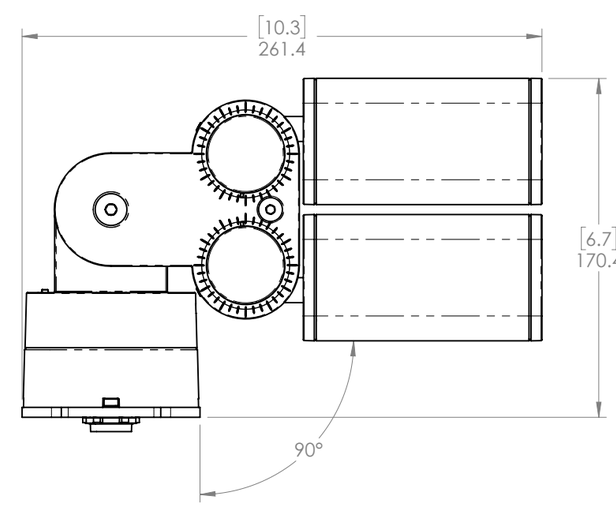

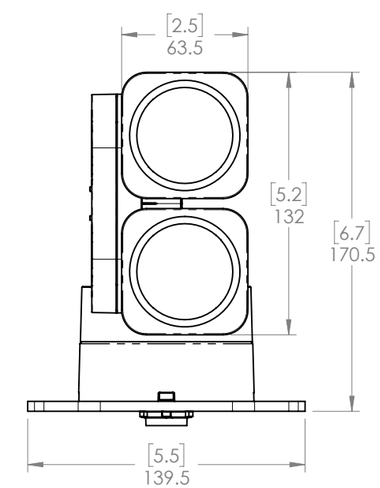

PROPRIETARY AND CONFIDENTIAL	UNLESS OTHERWISE SPECIFIED	ECOSENSE®
THE INFORMATION CONTAINED IN THIS DRAWING IS THE SOLE PROPERTY OF ECOSENSE LIGHTING, INC. ANY REPRODUCTION IN PART OR AS A WHOLE WITHOUT THE WRITTEN PERMISSION OF ECOSENSE LIGHTING IS PROHIBITED. © 2017 ECOSENSE LIGHTING, INC.	DIMENSIONS ARE IN MILLIMETERS TOLERANCES PER DIN ISO 2768 T1 CLASS M (MEDIUM) INTERPRET GEOMETRIC TOLERANCING PER: ASME Y14.5	TITLE: RISE F080 DUO VERTICAL
		DRAWN BY: J. HAWKINS · DATE DRAWN: 06/12/2017 · DRAWING NUMBER: · REV: 4
		PROJECT ENGINEER · THIRD ANGLE PROJECTION · SIZE: B · SCALE: 1:3 · SHEET: 1 OF 3

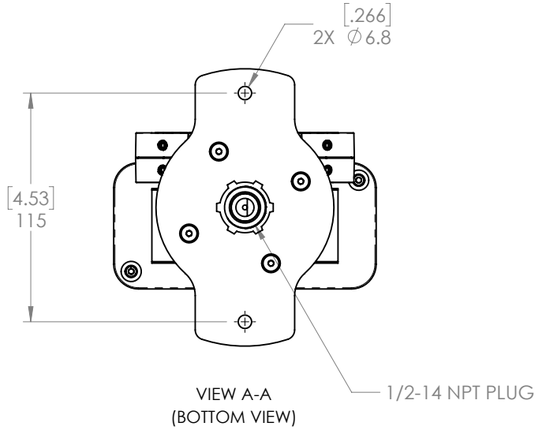

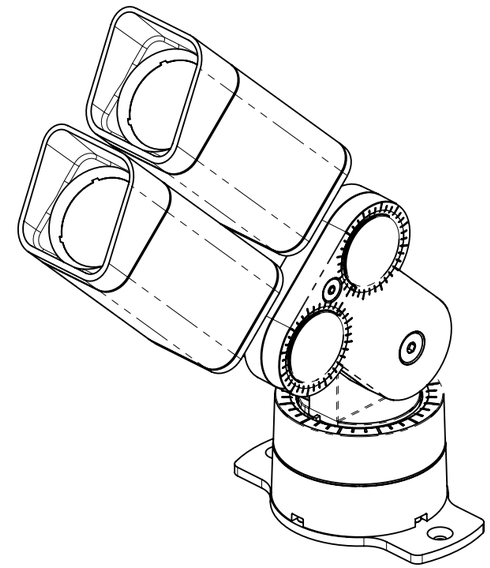

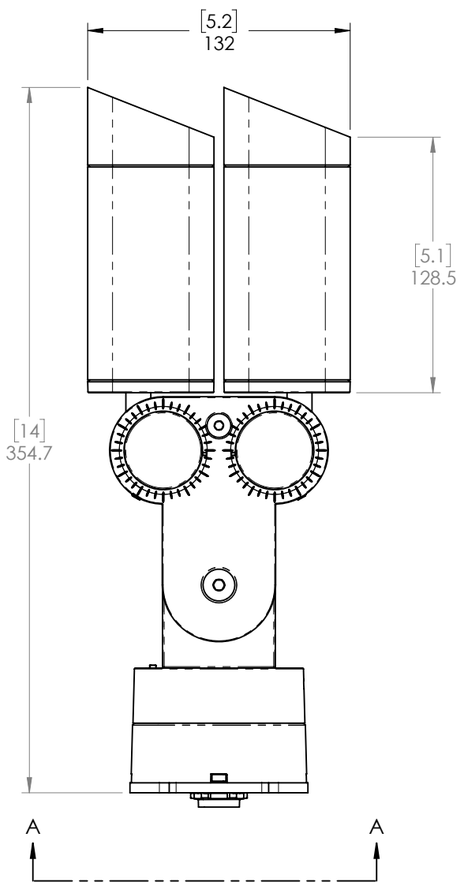

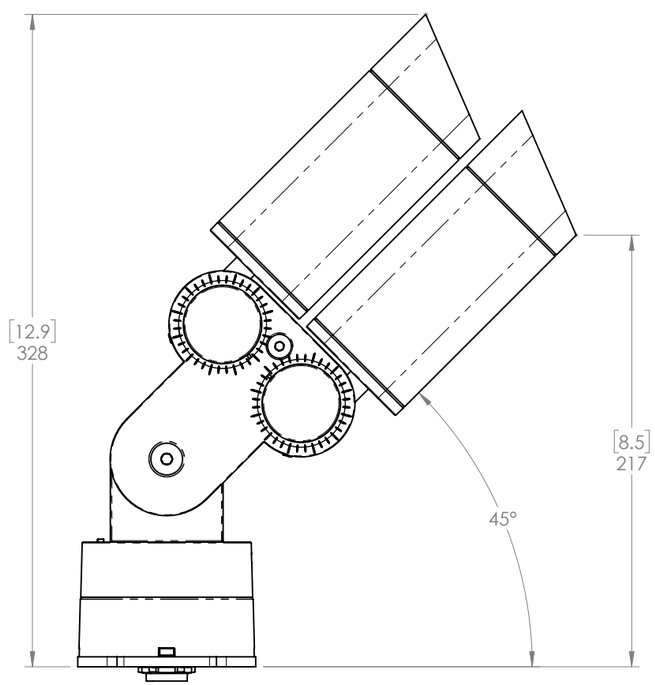

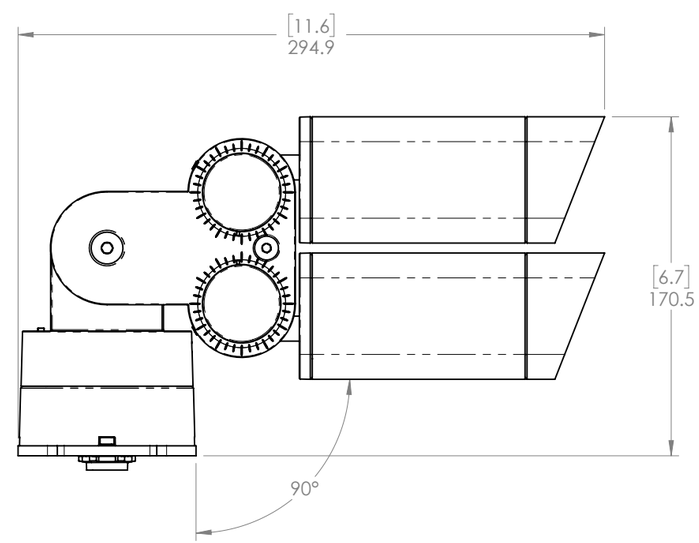

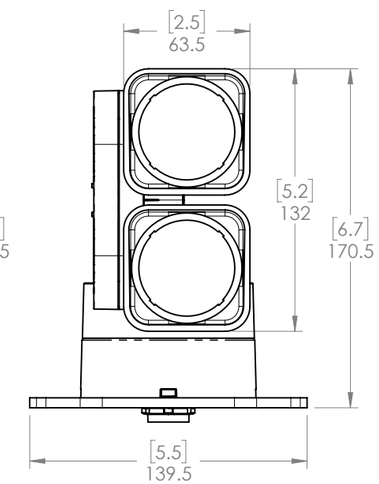

PROPRIETARY AND CONFIDENTIAL	UNLESS OTHERWISE SPECIFIED	ECOSENSE®
THE INFORMATION CONTAINED IN THIS DRAWING IS THE SOLE PROPERTY OF ECOSENSE LIGHTING, INC. ANY REPRODUCTION IN PART OR AS A WHOLE WITHOUT THE WRITTEN PERMISSION OF ECOSENSE LIGHTING IS PROHIBITED.	DIMENSIONS ARE IN MILLIMETERS TOLERANCES PER DIN ISO 2768 T1 CLASS M (MEDIUM) INTERPRET GEOMETRIC TOLERANCING PER: ASME Y14.5	TITLE: RISE F080 DUO VERTICAL
© 2017 ECOSENSE LIGHTING, INC.		DRAWN BY: J. HAWKINS DATE DRAWN: 06/12/2017 DRAWING NUMBER: REV: 4
		PROJECT ENGINEER: THIRD ANGLE PROJECTION SIZE: B SCALE: 1:3 SHEET: 2 OF 3

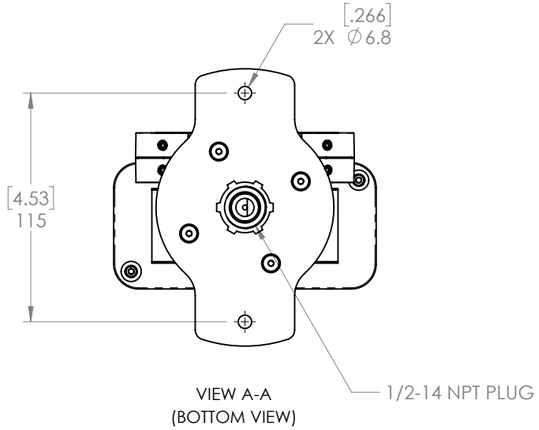

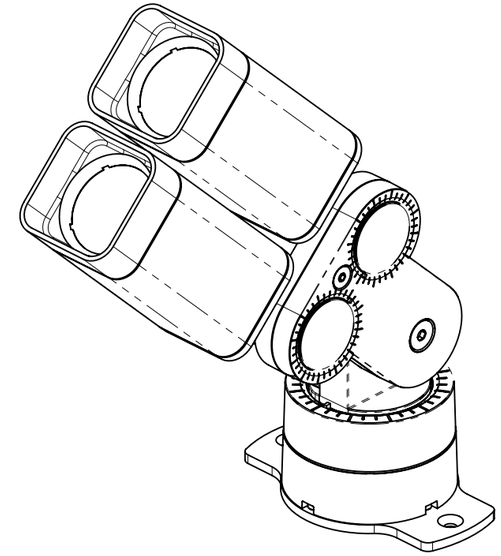

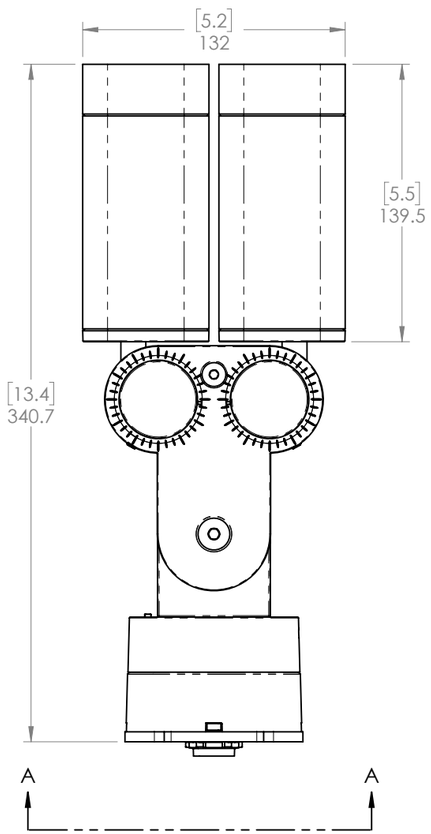

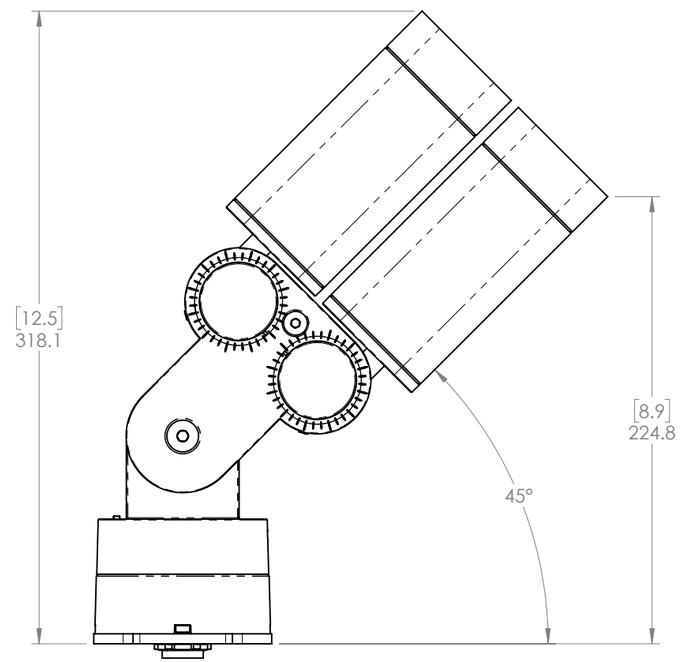

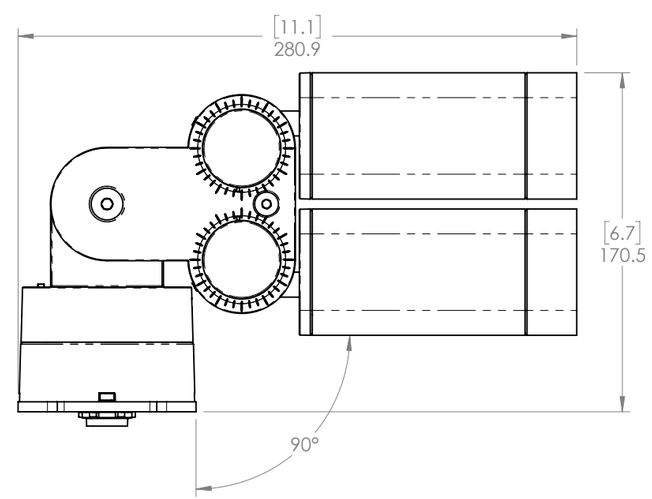

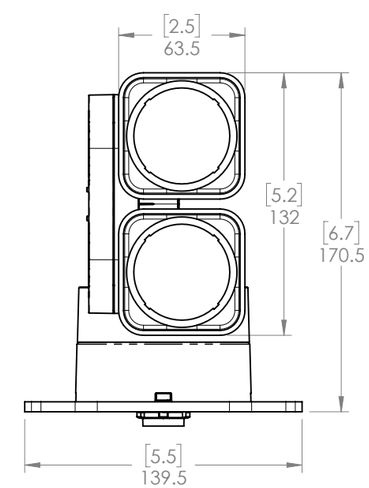

PROPRIETARY AND CONFIDENTIAL	UNLESS OTHERWISE SPECIFIED	ECOSENSE®
THE INFORMATION CONTAINED IN THIS DRAWING IS THE SOLE PROPERTY OF ECOSENSE LIGHTING, INC. ANY REPRODUCTION IN PART OR AS A WHOLE WITHOUT THE WRITTEN PERMISSION OF ECOSENSE LIGHTING IS PROHIBITED.	DIMENSIONS ARE IN MILLIMETERS TOLERANCES PER DIN ISO 2768 T1 CLASS M (MEDIUM) INTERPRET GEOMETRIC TOLERANCING PER: ASME Y14.5	TITLE: RISE F080 DUO VERTICAL
© 2017 ECOSENSE LIGHTING, INC.		DRAWN BY: J. HAWKINS · DATE DRAWN: 06/12/2017 · DRAWING NUMBER: · REV: 4
		PROJECT ENGINEER · THIRD ANGLE PROJECTION · SIZE: B · SCALE: 1:3 · SHEET: 3 OF 3